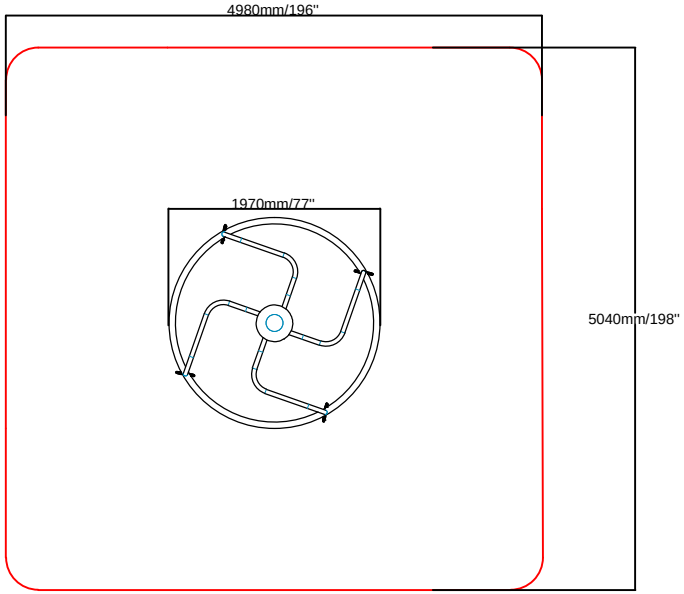
4980mm/196"
1970mm/77"
5040mm/198"

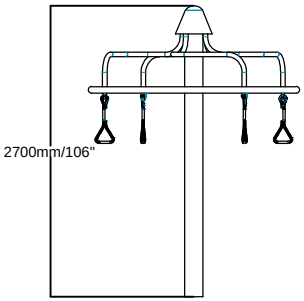
2700mm/106"