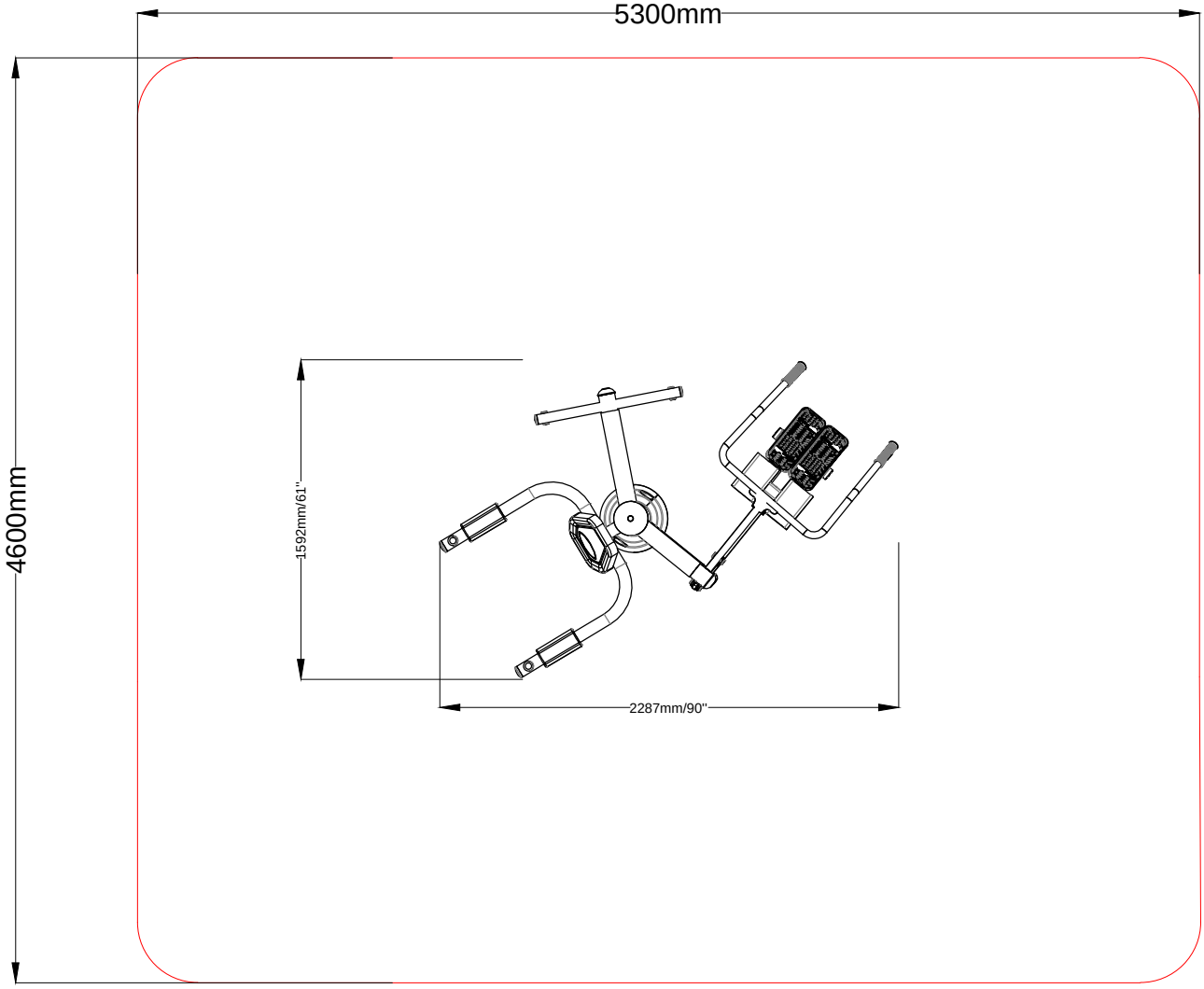
5300mm
4600mm
1592mm/61"
2287mm/90"

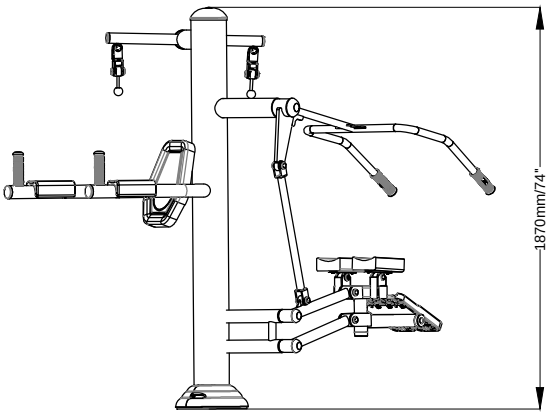
1870mm/74"